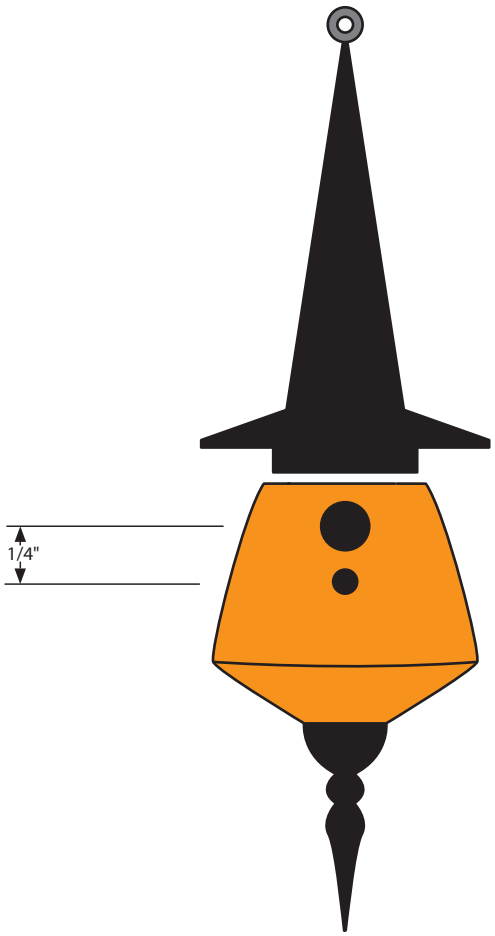

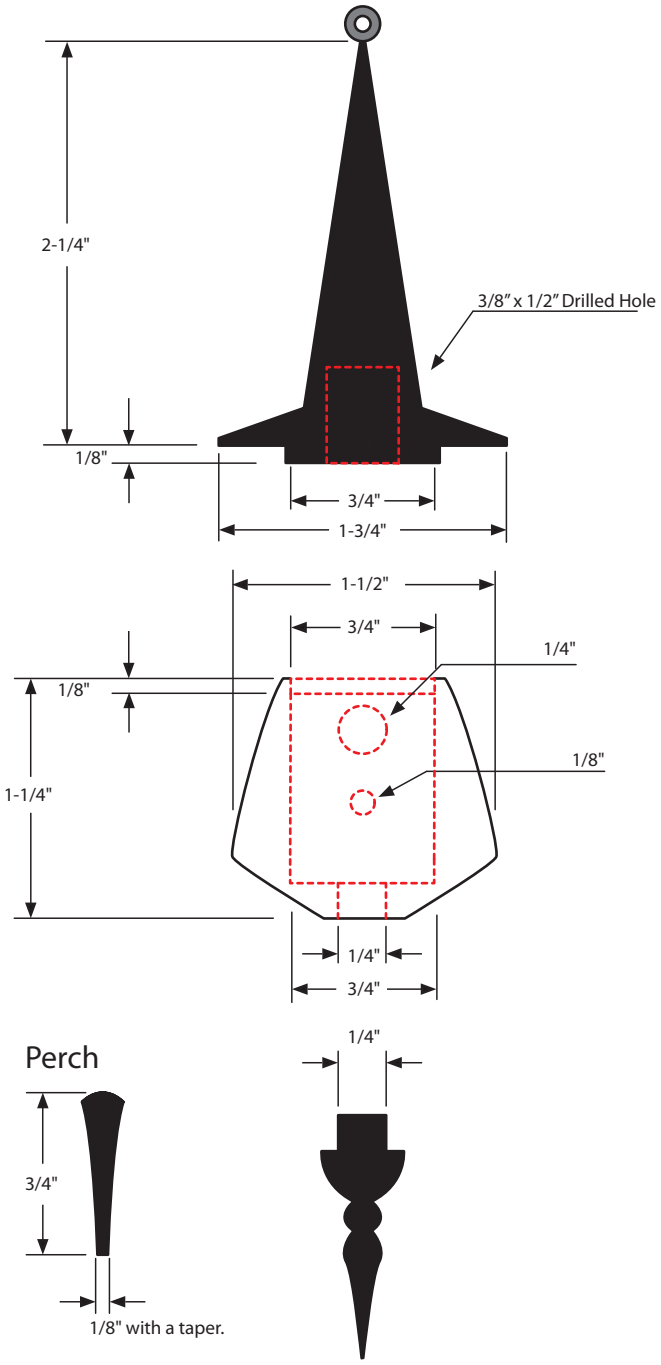

Last Modified 10/12/2011